KEGLAND SERIES X PLUS

Dimension drawings

For our 4 & 6 Tap Home Keg Systems

Need a hand? We're local and happy to help.

Tap That Brewery & Keghouse
1/10 Ern Harley Dr, Burleigh Heads QLD 4220
0481 583 979 · cheers@tapthatbrewery.com.au

Set-up guide	tapthatbrewery.com.au/setup
Troubleshooting	tapthatbrewery.com.au/help
Keg refills	tapthatbrewery.com.au/refills
Book a demo	tapthatbrewery.com.au/demo

Scan for help

tapthatbrewery.com.au

This is the manufacturer's original manual, supplied by Tap That Brewery & Keghouse.
Always follow the manufacturer's safety and installation instructions.
Liquor licence 247868 · Please drink responsibly.

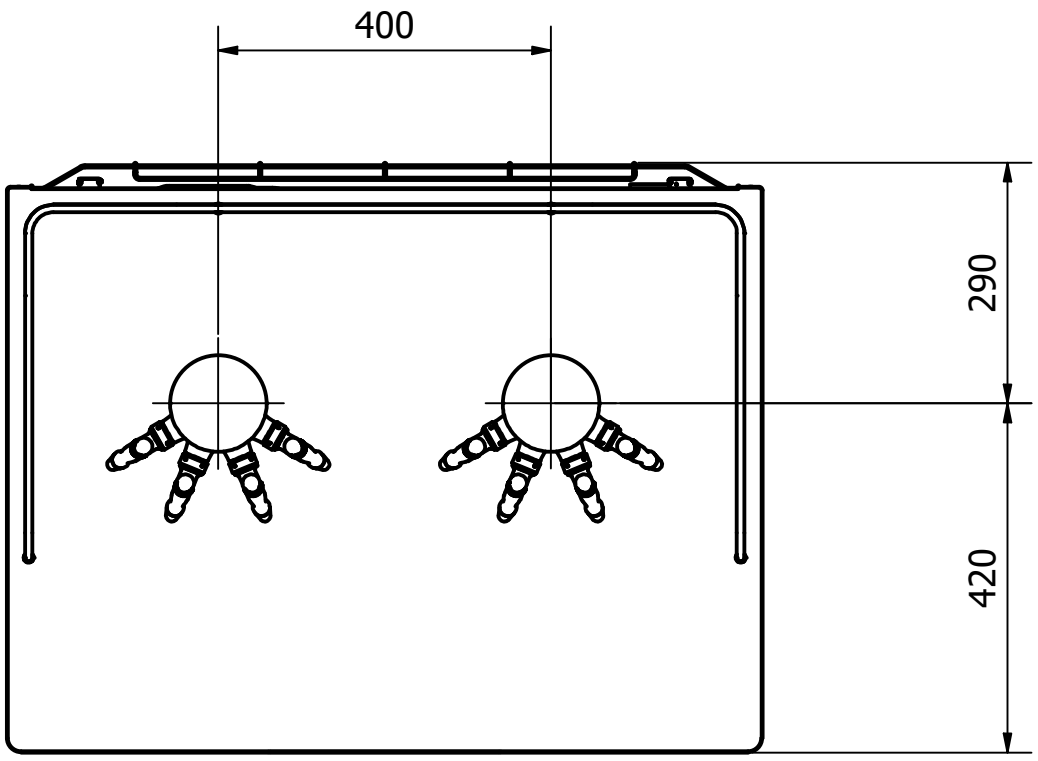

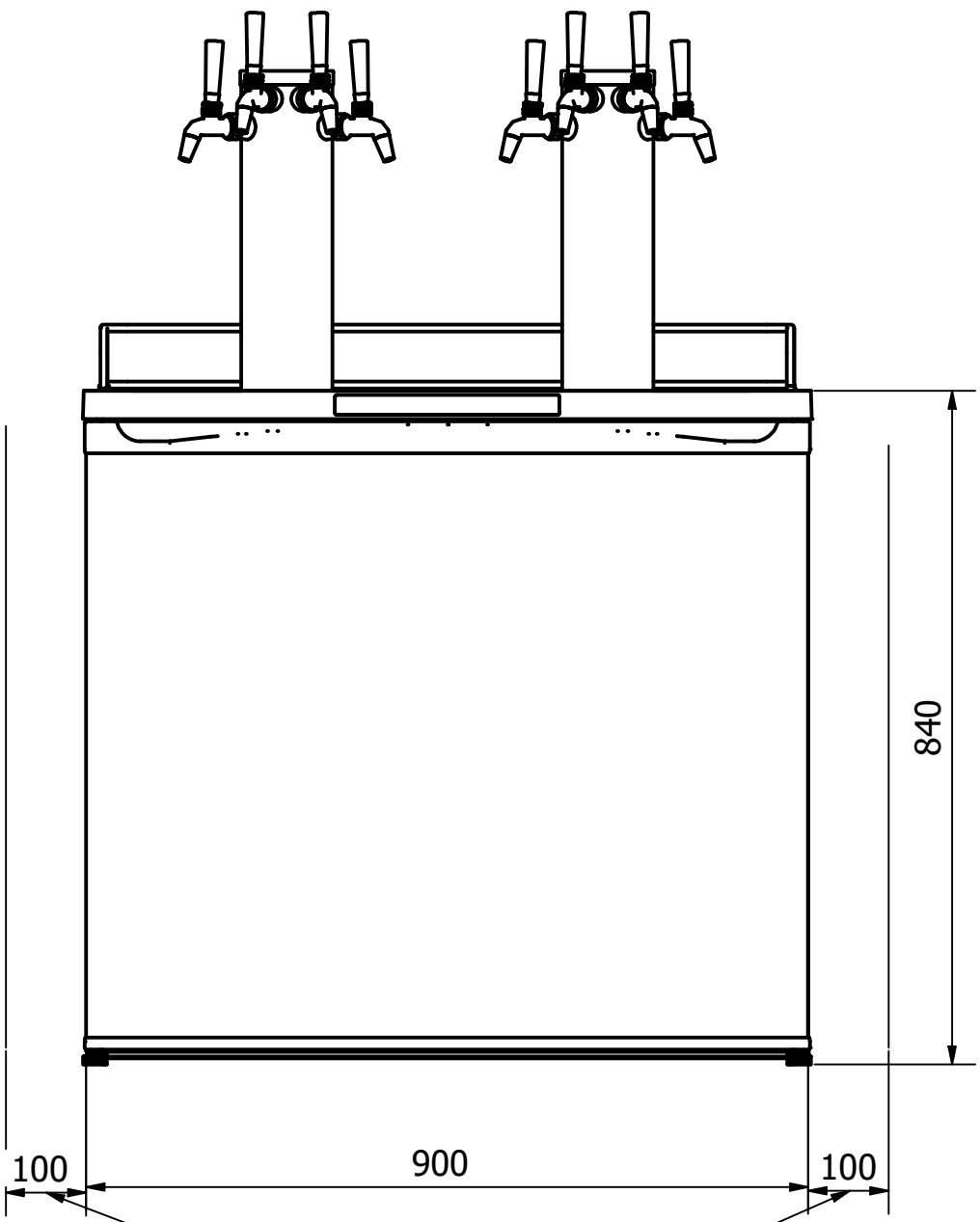

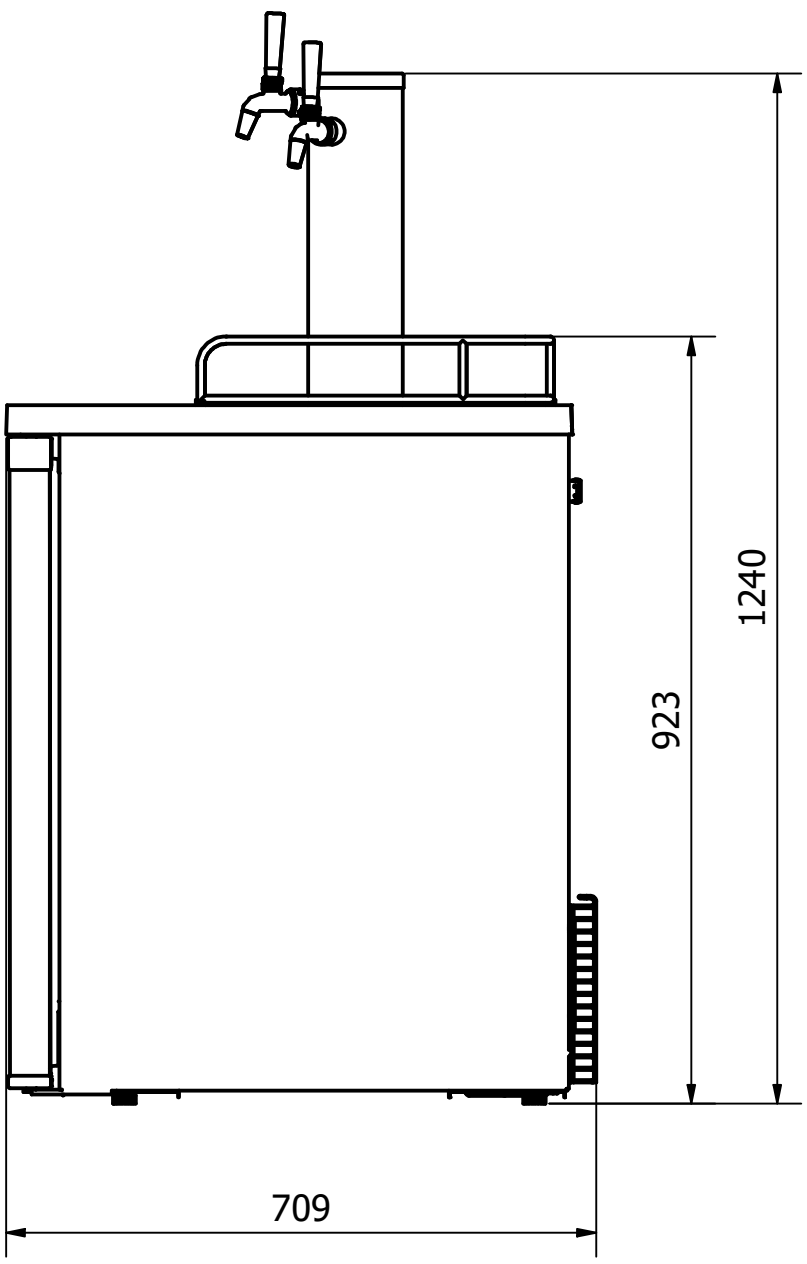

Installation side clearance

PROJECTION:

KegLand
www.KegLand.com.au

UNLESS OTHERWISE STATED
ALL DIMENSIONS IN MILLIMETRES

UNSPECIFIED TOLERANCES

LINEAR	ANGULAR
0 = ± 2.0	0 = ± 2.0°
0.0 = ± 0.2	0.0 = ± 0.5°
0.00 = ± 0.05	
0.000 = ± 0.01	

MACHINED SURFACE 3.2

MATERIAL:

FINISH:

PART NUMBER:

X-Plus Kegerator