KEGLAND SERIES 4 & SERIES X

Dimension drawings

For our 2 & 3 Tap Home Keg Systems

Need a hand? We're local and happy to help.

Tap That Brewery & Keghouse
1/10 Ern Harley Dr, Burleigh Heads QLD 4220
0481 583 979 · cheers@tapthatbrewery.com.au

Set-up guide	tapthatbrewery.com.au/setup
Troubleshooting	tapthatbrewery.com.au/help
Keg refills	tapthatbrewery.com.au/refills
Book a demo	tapthatbrewery.com.au/demo

Scan for help

tapthatbrewery.com.au

This is the manufacturer's original manual, supplied by Tap That Brewery & Keghouse.
Always follow the manufacturer's safety and installation instructions.
Liquor licence 247868 · Please drink responsibly.

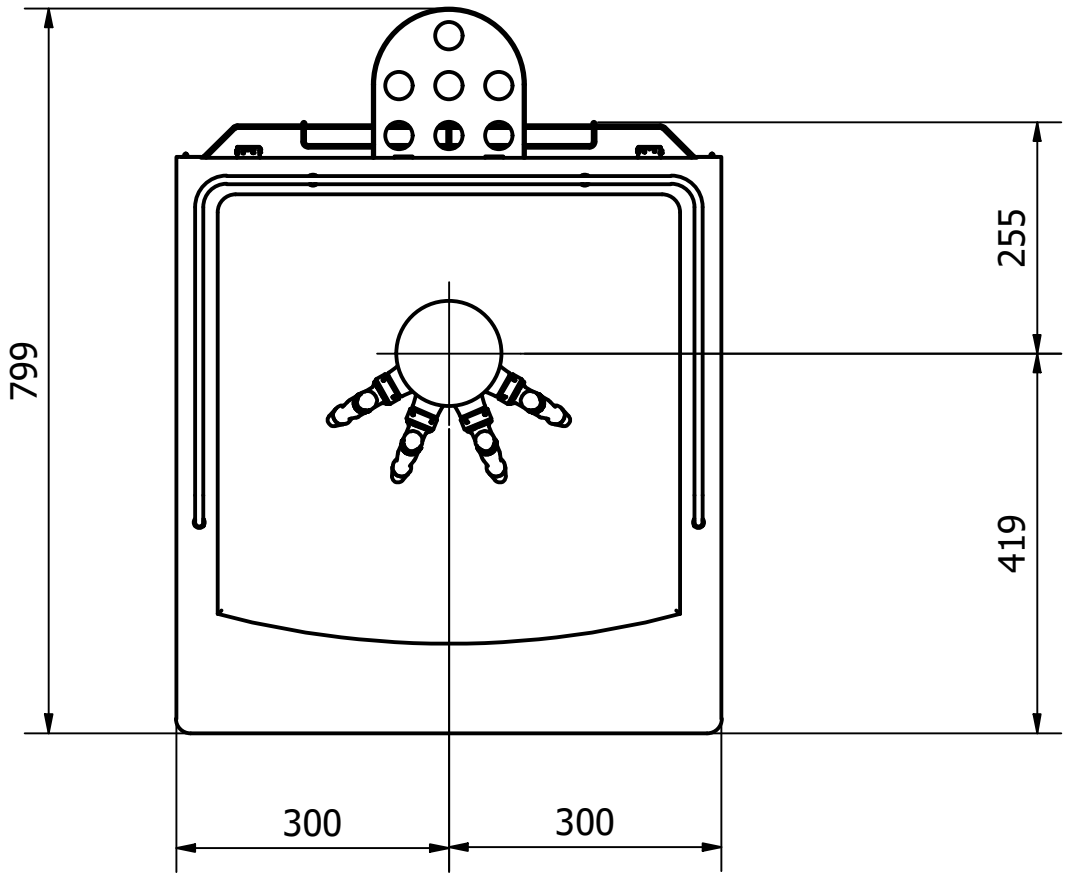

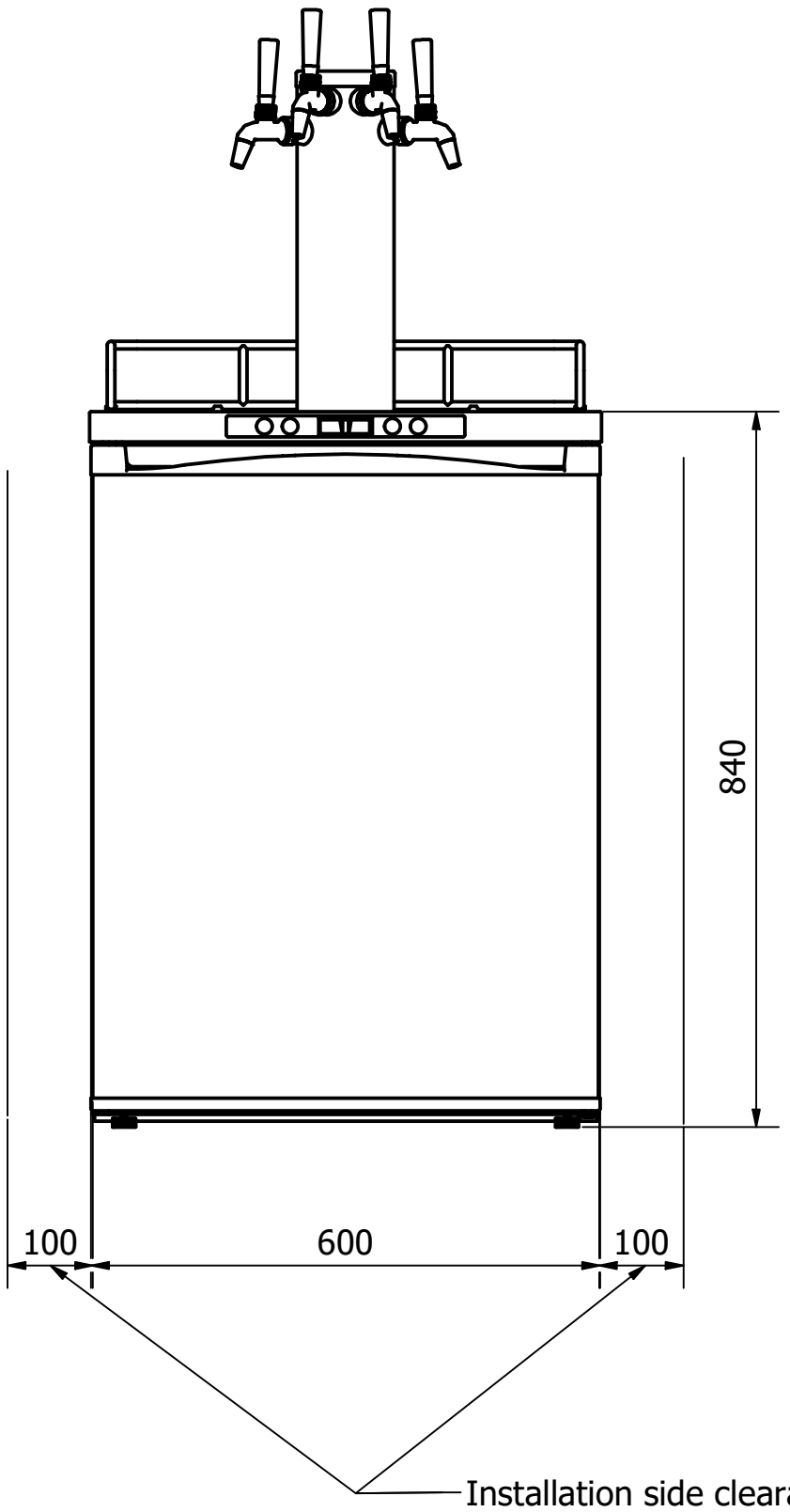

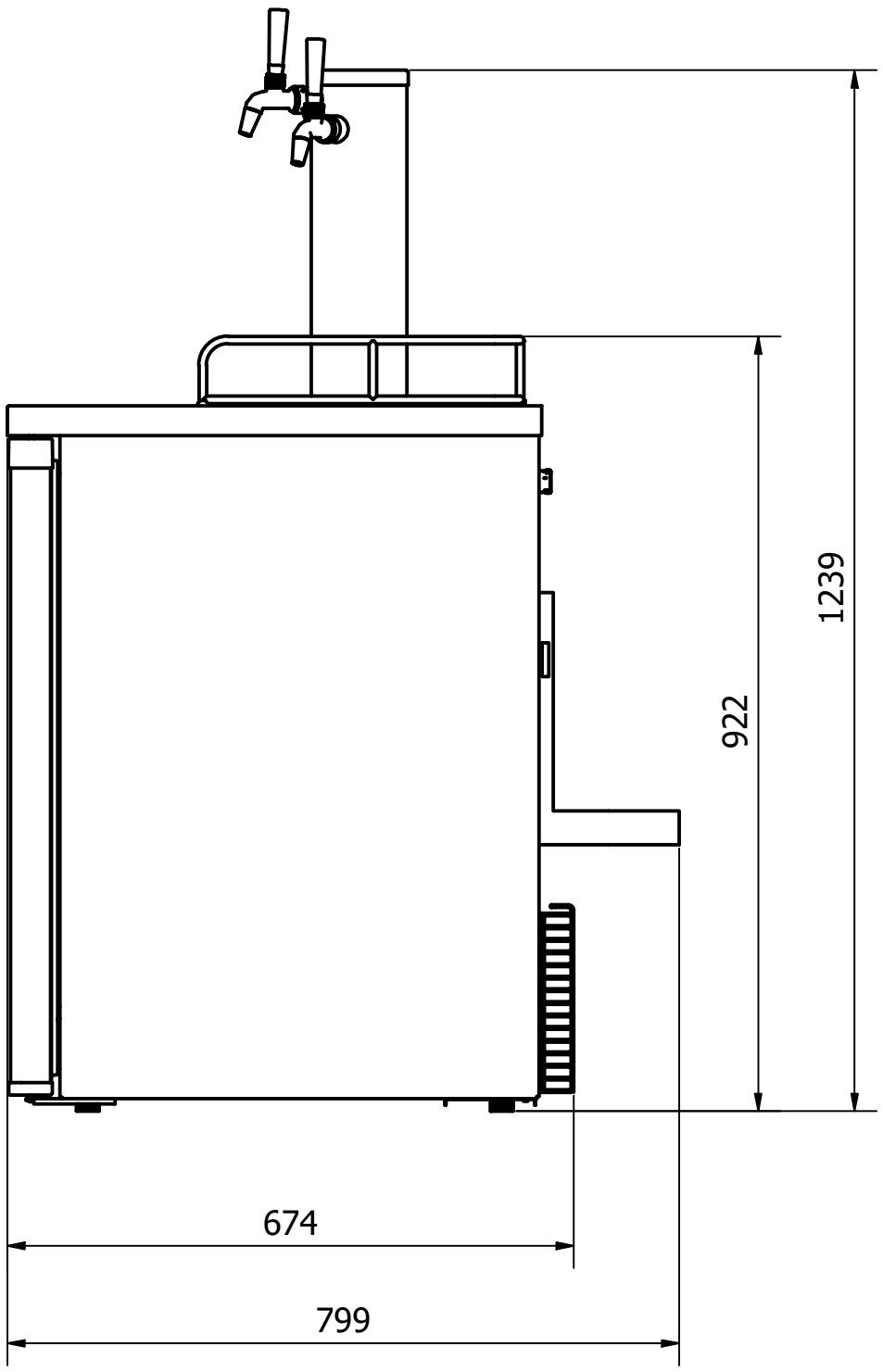

Installation side clearance

PROJECTION: 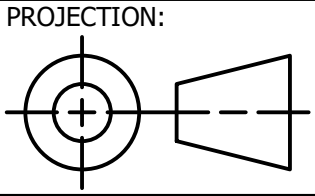 KegLand www.KegLand.com.au	UNLESS OTHERWISE STATED ALL DIMENSIONS IN MILLIMETRES UNSPECIFIED TOLERANCES LINEAR: 0 = ± 2.0, 0.0 = ± 0.2, 0.00 = ± 0.05, 0.000 = ± 0.01 ANGULAR: 0 = ± 2.0°, 0.0 = ± 0.5° MACHINED SURFACE 3.2	MATERIAL:	FINISH:
		PART NUMBER: Series X - Quad Font	